REVISIONS	
SYM	DESCRIPTION

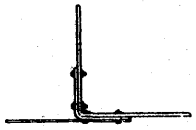

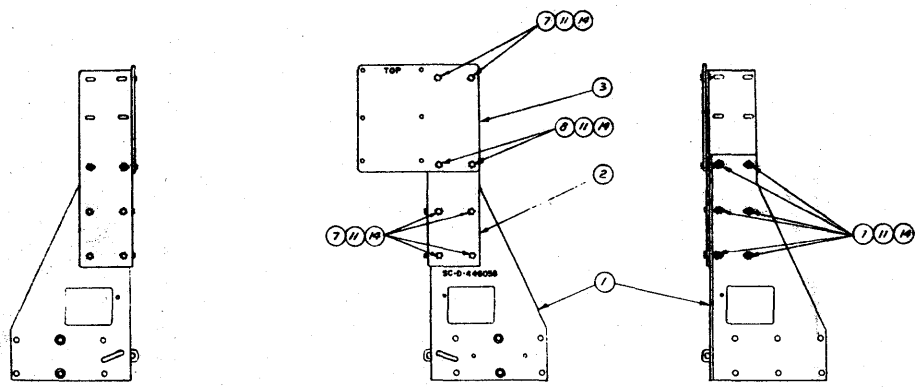

NOTE:

1- 4 SHALL NOT BE ASSEMBLED, BUT SHALL BE SECU
2- PLACE 5 6 9 10 12 13 15 AND 16 IN 17 AND ATTACH TO

THIS DRAWING AND DRAWINGS, SPECIFICATIONS
REFERENCED AND THEIR SUBSIDIARIES, IF ANY,
THE NECESSARY DATA RELATING TO DRAWI

TITLE	NUMBER
	SPECIFICATIONS and/or STANDARDS
	FEDERAL
ALUMINUM	QQ-A-200
ALUMINUM	QQ-A-250
ALUMINUM	QQ-A-318
STEEL	QQ-S-698
	MILITARY (JAN)
WELDING	MIL-W-6858
MARKING	MIL-M-13231
FINISHES	MIL-F-14072

ITEM NO.	QTY REQD	PART OR IDENTIFYING NUMBER	NOMENCLATURE OR DESCRIPTION
17	1	SC-B-49729-2	BAG 3 X 5
16	2	MS27183-8	WASHER, FLAT NO. 10
15	2	MS45904-60	WASHER, LOCK NO. 10 1 ET
14	28	MS45904-68	WASHER, LOCK 1/4 1 ET
13	24	MS45904-72	WASHER, LOCK 5/16 1 ET
12	2	MS35650-102	NUT, HEX, PLAIN NO. 10-32
11	14	MS35690-422	NUT, HEX, PLAIN 1/4-28
10	12	MS35690-822	NUT, HEX, PLAIN 5/16-24
9	2	MS35224-67	PAN HD MACH SCR, NO. 10-32 X 1 LG
8	2	MS90726-8	HEX HD CAP SCR, 1/4-28 X 1 LG
7	12	MS90726-6	HEX HD CAP SCR, 1/4-28 X 3/4 LG
6	4	MS35242-109	FLT HD MACH SCR, 5/16-24 X 1 3/8 LG
5	8	MS90726-36	HEX HD CAP SCR, 5/16-24 X 1 1/2 LG
4	2	SC-C-446060	REINFORCEMENT
3	1	SC-C-48637	SUPPORT
2	1	SC-C-48636	BRACE
1	1	SC-D-446059	MOUNT ASSEMBLY

LIST OF MATERIAL

NEXT ASSY	USED ON
—	—

APPLICATION

UNLESS OTHERWISE SPECIFIED DIMENSIONS ARE IN INCHES
TOLERANCES ON FRACTIONS DECIMALS ANGLES

AUTHENTICATION

DRAWN QUENTIN W JONES
CHECKED A.O
VERIFIED M.S
APPROVED
DATE 18 MARCH 66

U. S. ARMY ELECTR
FORT MONMOUTH

ANTENNA
ASSE

CODE IDENT NO. 20309
SIZE D
SC-
SCALE 1/4

WHEN REFERRING TO THIS DRAWING STATE DRAWING NO., APPL